HIGH VOLUME HOT BEVERAGE DISPENSERS

MODELS: CAFEPC1CS63400, PCGT4J15000

ITEM NO

PROJECT

DATE

Rich in Design, Rich in Features. The Curtis High Volume Hot Beverage Dispensers are Perfect for Stadiums, Ski Lodges, etc.

Now any operation can offer profitable and delicious cappuccino beverages.

Enrich your profits while delighting your customers with the beautifully styled High Volume Beverage Dispensers from Curtis. Designed for high volume locations such as Ski Resorts, these units offer you non-stop sales even in the busiest season. The CAFEPC and PCGT machines also stimulate impulse sales through attractive form with a vibrant, attention-grabbing display.

Customers will love the rich flavor and fast service. Your staff will be pleased with the easy operation and maintenance. You will appreciate the affordable price, great reliability , and profits.

PCGT4

The first thing you'll notice about the PCGT is its smooth Euro-styled lines, with an impressive, oversized backlit display. The PCGT captures attention from the moment your customers walk in. But the real beauty lies behind its stunning surface. Curtis has incorporated the industries most advanced digital technology -G3 ADS - into the PCGT. It's this technology that dramatically simplifies use, minimizes maintenance and cost and increases your profitability.

CAFEPC

The compact Curtis CAFEPC offers commercial quality at an exceptional value. CAFEPC models share many critical components with Curtis Generation Three PCGT Systems, so you'll get all the benefits of a professional machine without the high-end features you may not need.

PCGT - FEATURES AT A GLANCE

- **G3 ADS™ Digital Control Module (G3/ADS™)** – Provides precise control over all critical blending and dispensing functions.
- **Factory Pre-Set** – For out-of-the-box operation.
- **Irradiant LCD Digital Display** – Extra bright and easy to see.
- **Scroll-Through Precision Programming** – Adjust powder flow in 5% increments and water temperature from 80°F to 204°F to create the perfect hot or cold beverage for your operation.
- **Uniform programming is ideal for large rollouts of equipment.**
- **Touch Controls** – Smooth and easy-to-clean.
- **On-Board Diagnostics** – Continually senses proper operation. A Service Phone Number will be displayed if technical assistance is required.
- **Fully Sealed** – G3 chips and processors are encapsulated in an impact-resistant polymer, virtually eliminating the harmful effects of heat, moisture and physical damage.
- **Digital Temperature Control** – Precisely senses water temperature and level to maximize energy efficiency and prevent heating element burnout.
- **Fixed-Flow Water System** – Ensures precise drink blending regardless of irregularities in water pressure/volume.
- **Standard 220VAC Operation.**

CAFEPC - FEATURES AT A GLANCE

- **Fits Anywhere** – The Cafe PC's compact size lets you place it virtually anywhere with a close water connection.
- **Standard Dual Voltage Operation** – 220V operation provides optimal recovery during peak times.
- **Low Maintenance Costs** – The key components that ensure reliable operation in the Cafe PC are the same heavy-duty components use in our top-of-the-line PCGT models, so you don't have to compromise with a less expensive machine. Plus, many components are shared across all four models within the Cafe Series.
- **Consistent Drink Quality** – Cafe models utilize Curtis' proven advanced ADS digital control module that allows precision blending for consistently great beverages. Powder-to-water ratio is set right from the front panel, so there's never a need to manually adjust internal valves. Plus, Cafe series machines can be set for continuous or portion control dispensing.
- **Designed to Keep Profits Flowing** – From the drip tray to the removable powder hoppers, the CAFEPC of designed for quick, mess-free servicing without special training.

STANDARD FEATURES ON PCGT4 AND CAFEPC1

- **Direct Drive Mixing Augers** – Ensure smooth, high-speed blending of powdered drinks.
- **High Velocity Whipping Motors** – Sloped whipping motors ensure smooth, high-speed blending of powdered drinks.
- **Curtis Exclusive 3/2/1 Warranty** – 3-years electronic components, 2-years non-electronic components, 1-year labor.

Curtis high volume beverage dispensers are designed to keep the profits flowing with quality commercial grade components.

- **Easy Access Front Open Door with Inside Hinged Panel -** Simplifies powder refills and maintenance. Provides easy access to change lighted graphic or replace the units standard florescent tube.
- **Oversized Backlighted Graphic -** Attracts customers. Increases impulse sales. Standard Hot Chocolate film included.
- **Easy-Serv Dispensing Tubes -** Bright yellow color directs customers to proper cup placement. Extended, taper design prevents splashes.
- **Large Capacity Drip Tray/ Cup Guide -** Integral guide positions cup directly blow dispensing spout. Dual overflow via-ducts indicate when drip tray should be drained and serviced.
- **Touch-Button Hot Water Cleaning System -** Simple, one button operation sends a powerful blast of hot water into the whipper chamber, rinsing it for easy clean-up and reducing powder build up.
- **High-Volume Powder Hoppers -** Four 10 lb. hoppers allow operators to quadruple the volume of top selling flavors... reducing fill times. Hoppers must be removed for refilling, virtually eliminating the wear and operating downtime caused by spilled powder. Positioning guides make it impossible to insert the hoppers incorrectly.

- **"Eyebrow-Styled" Graphic Frame -** Attractive curved front enhances the standard Hot Chocolate graphic. Easy-change design allows for your signature message to be created at any local copy center enhancing sales impact.

- **Standard Drip Tray -** Removable drip tray catches any spills to keep counter area clean and tidy.
- **Digital Adjustable Powder-to-Water Ratio** - Easily set right from the front panel. Individually adjustable to ensure the perfect flavor every time.
- **High Volume 14 lb. Hopper -** Minimizes fill time. Hoppers must be removed for refilling, virtually eliminating machine downtime caused by spilled powder inside the machine. Positioning guides ensure proper hopper placement.

One-Touch Hot Water Cleaning System

Sends a powerful blast of hot water into the whipping chamber, rinsing it for easy clean-up and reducing powder build-up.

Angled Whipping Chamber and "Brake-Type" Auger Motors

To ensure perfect drinks, powder augers feature a brake-type motor that accurately stops the dispensing process at your set ratio every time. Angled chamber drain liquids far better to significantly reduce cleaning requirements.

CAFEPC1

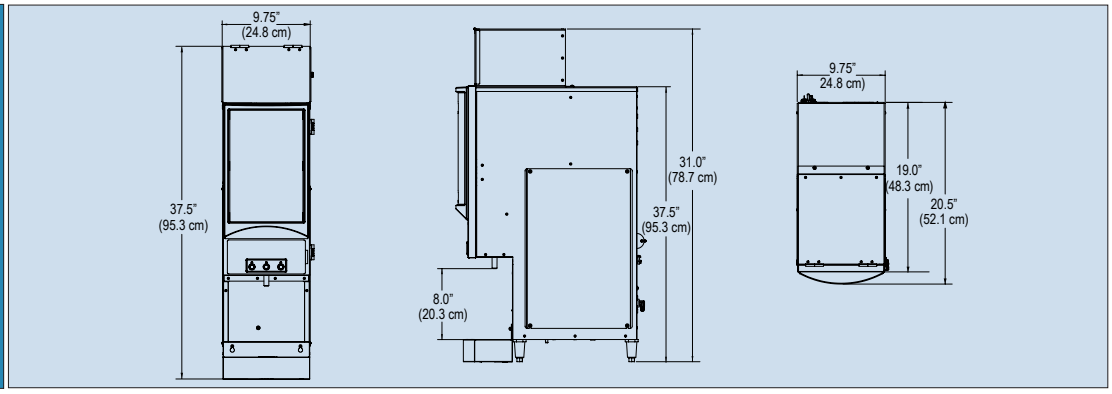

PCGT4

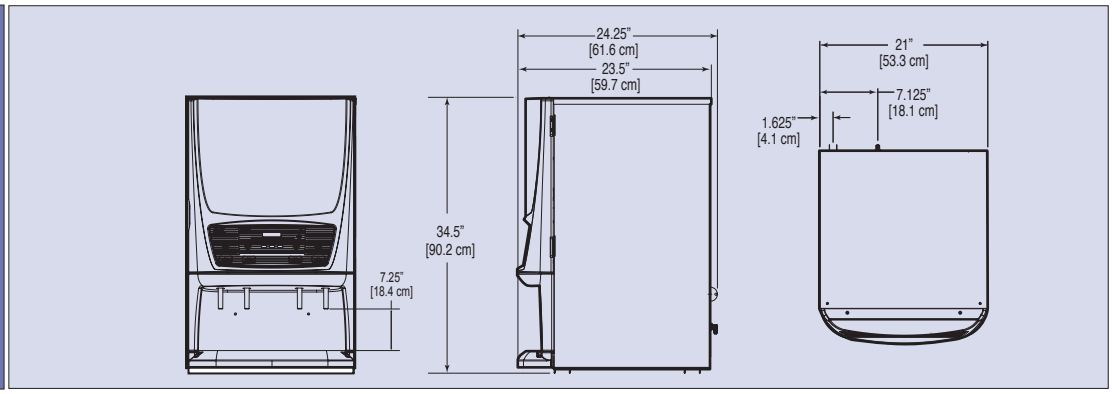

Specifications	CAFEPC1	PCGT4
Hoppers	1	4
Hopper Capacity	14 lbs.	10 lbs.
Water Tank	2 Gallons	5.25 Gallons
Lighted Display Area (H x W)	N/A	13.5″ x 17.93″
Dimensions (H x W x D)	37.5″ x 9.75″ 20.5″	34.5″ x 21″ x 23.5″
Cup Clearance	7.25″	7.25″
Voltage	120/220V	220V/60Hz
Power Requirements	1800/3500W 15A	3700W/15.8A
Cord & Plug	6 ft./NEMA 5-15P	Not Furnished
Water Inlet	1/4″ Flare	1/4″ Flare
Shipping Weight	60 lbs.	139 lbs.
Cube	8.2	10

WILBUR CURTIS COMPANY, INC.
6913 Acco Street, Montebello, CA 90640-5403
Telephone: 800-421-6150 · 323-837-2300
Fax: 323-837-2406
www.wilburcurtis.com

© 2008 Wilbur Curtis Company, Inc.

Printed In U.S.A · NOV/08 – 15520 F-3642 revNC